Work Order ID 61529

August 30, 2010 10:15:02 AM

Item ID: D2857-2 **Accept** **Setup Start** **Stop**

Revision ID:

Item Name: Hinge Bracket

Start Date: 30/08/2010 **Start Qty:** 2.00 **Cust Item ID:**

Required Date: 08/09/2010 **Req'd Qty:** 2.00 **Customer:**

Reference: 10.08.30

Run Start **Stop**

Approvals: **Process Plan:** _____ **Date:** _____ **Tooling:** _____ **Date:** _____

QC: _____ **Date:** _____ **SPC (Y/N):** _____ **Date:** _____

Draw Nbr	Revision Nbr
D2857	Rev B

Sequence ID/ Work Center ID	Operation Description	Set Up/ Run Hours	Tool ID	Tool #	Plan Code	Accept Qty	Reject Qty	Reject Number	Insp. Stamp
100	BAND SAW	0.00							
Bandsaw	Memo	0.00				2	Ø		
Jeaspa Bandsaw	Cut blanks 4.425"								
110	HAAS CNC VERTICAL MACHINING #1	0.00							
HAAS 1	Memo	0.00				2	Ø		
HAAS CNC vertical machine #1	1-Machine per folio FA940 FOLIO REV: B DWG REV: B 2-Deburr any rough edges								
120	QC2- Inspect parts off machine FAI/FAIB	0.00							
QC	Memo	0.00				2	Ø		
Quality Control									

Work Order ID 61529

August 30, 2010 10:15:02 AM

Item ID: D2857-2 **Accept** **Setup Start**

Revision ID: **Stop**

Item Name: Hinge Bracket

Start Date: 30/08/2010 **Start Qty:** 2.00 **Cust Item ID:**

Required Date: 08/09/2010 **Req'd Qty:** 2.00 **Customer:**

Reference:

Run Start

Approvals: **Process Plan:** _____ **Date:** _____ **Tooling:** _____ **Date:** _____

Stop

QC: _____ **Date:** _____ **SPC (Y/N):** _____ **Date:** _____

Sequence ID/ Work Center ID	Operation Description	Set Up/ Run Hours	Tool ID	Tool #	Plan Code	Accept Qty	Reject Qty	Reject Number	Insp. Stamp
130	QC8- Inspect parts - second check	0.00	ark 10/09/13			2	ø		
QC	Memo	0.00							
Quality Control									
140	Chemical Conversion Coat per QSI005 4.1	0.00	BR 10-9-14			2			
HandFinish	Memo	0.00							
Hand Finishing									
150	QC3- Inspect Part Finish	0.00	10/9/14			2	¢		
QC	Memo	0.00							
Quality Control									

Work Order ID 61529

August 30, 2010 10:15:02 AM

Item ID: D2857-2 **Accept** **Setup Start**

Revision ID: **Stop**

Item Name: Hinge Bracket

Start Date: 30/08/2010 **Start Qty:** 2.00 **Cust Item ID:**

Required Date: 08/09/2010 **Req'd Qty:** 2.00 **Customer:**

Reference:

Run Start

Approvals: **Process Plan:** _____ **Date:** _____ **Tooling:** _____ **Date:** _____

Stop

QC: _____ **Date:** _____ **SPC (Y/N):** _____ **Date:** _____

Sequence ID/ Work Center ID	Operation Description	Set Up/ Run Hours	Tool ID	Tool #	Plan Code	Accept Qty	Reject Qty	Reject Number	Insp. Stamp
160	White Gloss(Ref:4.3.5.1) per OSI005 4.3-Alum MLIS291	0.00	10-9-21			2			
Powdercoat	Memo	0.00							
Powder Coating	START TIME: 8:00 ☐FINISH TIME: 2:00 ☐OVEN TEMPERATURE: 2:30								
170	QC3- Inspect Part Finish	0.00							
QC	Memo	0.00	10/04/22			2	ϕ		
Quality Control									
180	Identify as per dwg & Stock Location 25	0.00							
Packaging	Memo	0.00				10/9/22			
Packaging									

Picklist Print

August 30, 2010 10:15:02 AM

Work Order ID: 61529

Parent Item: D2857-2

Parent Item Name: Hinge Bracket

Start Date: 30/08/2010 **Required Date:** 08/09/2010

Start Qty: 2.00 **Required Qty:** 2.00

Comments: IPP □C□00.06.22□Removed P/O for powder coat□EC□
IPP □D□06.03.30□Added level 8 □EC□

Component Item ID/ Item Name	Replacement Item ID	Mfg/ Purch	Bin Item	Primary Location	Last Location	Route Seq ID	Unit of Measure	Qty on Hand	Qty per Kit	Total Qty	Qty Issued	Date Issued	Status
M6061T6B2.000X01.250		Purchased	No			100	f	30.3467	0.37	0.778947			
6061-T6 Bar 2.00 x 1.25													

Location	Loc Qty	Loc Code
MAT	30.3467	
114507 ~~114407~~	18.3467	
114899	12	

0.7789 ft J.A 10/09/13

DART AEROSPACE LTD	Work Order:	61529
Description: Hinge Bracket	Part Number:	D2857-2
Inspection Dwg: D2857 **Rev:** B		Page 1 of 1

FIRST ARTICLE INSPECTION CHECKLIST

[X] First Article [ ] Prototype

Drawing Dimension	Tolerance	Actual Dimension	Accept	Reject	Method of Inspection	Comments
4.300	+/-0.010	4.303	✓		Vern	GA-01
4.000	+/-0.010	4.001	✓		"	"
0.340	+/-0.010	0.341	✓		"	"
1.110	+/-0.005	1.110	✓		"	"
1.790	+/-0.010	1.791	✓		"	"
1.320	+/-0.005	1.320	✓		"	"
2.000	+/-0.010	2.001	✓		"	"
0.340	+/-0.010	0.340	✓		"	"
0.447	+/-0.010	0.447	✓		"	"
Ø0.171	+0.005/-0.000	Ø0.173	✓		"	"
0.147	+/-0.010	0.145	✓		"	"
0.376	+/-0.010	0.377	✓		"	"
0.126	+/-0.010	0.125	✓		"	"
0.063	+/-0.010	0.064	✓		"	"
Ø0.166	+0.005/-0.000	Ø0.167	✓		"	"
0.911	+/-0.010	0.914	✓		"	"
0.600	+/-0.010	0.601	✓		"	"
0.125	+/-0.010	0.127	✓		"	"
0.150	+/-0.010	0.150	✓		"	"

Measured by:	B. A
Date:	10/09/13

Audited by:	[signature]
Date:	10/09/13

Prototype Approval:	N/A
Date:	N/A

Rev	Date	Change	Revised by	Approved
A	04.06.15	New Issue	KJ/JLM	
B	07.04.20	Dimensions update per Dwg Rev B	KJ/JLM	

DESIGN	DRAWN BY	DART AEROSPACE LTD
KE	LE	HAWKESBURY, ONTARIO, CANADA
CHECKED	APPROVED	DRAWING NO. / REV.
PH		D2857 / REV. B
		SHEET 1 OF 1
DATE		TITLE / SCALE
06.08.28		HINGE BRACKET / 1:1

REV	DATE	DESCRIPTION
A	98.12.14	NEW ISSUE
B	06.08.28	ADD THICKNESS, REDRAW W/ SOLIDWORKS

RELEASED 06-10-13

w/o 61529.

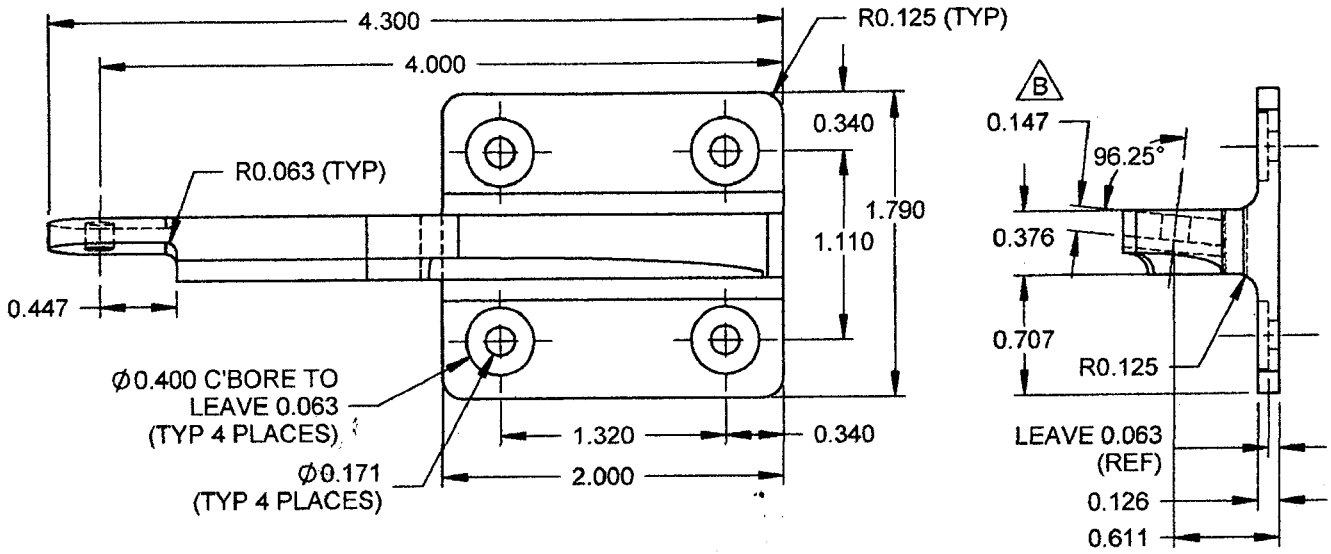

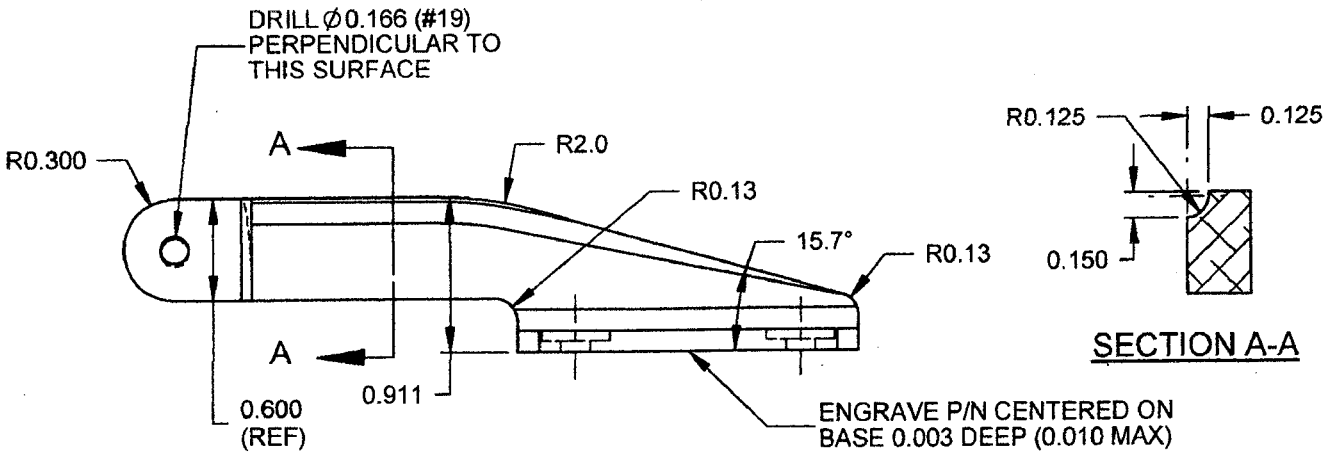

D2857-1 HINGE BRACKET
D2857-2 OPPOSITE

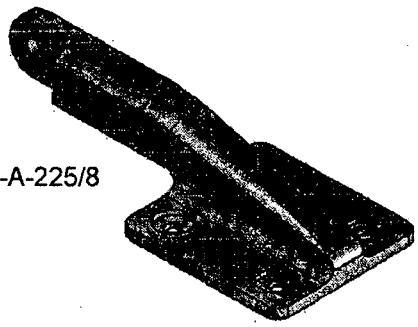

NOTES:
1) MATERIAL: 6061-T6 ALUMINUM BAR PER QQ-A-250/11 OR QQ-A-200/8 OR QQ-A-225/8 (REF DART SPEC M6061T6B)
2) FINISH: CHEMICAL CONVERSION COAT PER DART QSI 005 4.1
POWDER COAT WHITE (4.3.5.1) PER DART QSI 005 4.3
3) TOLERANCES ARE PER DART QSI 018 UNLESS OTHERWISE NOTED
4) ALL DIMENSIONS ARE IN INCHES UNLESS OTHERWISE NOTED
5) BREAK ALL SHARP CORNERS TO 0.010 MAX

Transaction Type	Item ID/ Item Name	Warehouse / Location ID	Reason	Employee ID / Location Code	Loc Trans Date	LocQtyPrior/ Location Qty	Lot Number	LotQtyPrior/ Lot Qty	Shelf Life Date / Lot Code	Extended Cost
Issue	ALS4-1032-130 / Insert	Main Warehouse	61220	QUIR01		197.0000		159.0000		
		ST282			8/11/10	-16.0000	114407	-16.0000		-$2.08
		Main Warehouse	61586	QUIR01		153.0000		143.0000		
		ST282			9/03/10	-16.0000	114407	-16.0000		-$2.08
		Main Warehouse	53062	LAVO01		137.0000		127.0000		
		ST282			9/13/10	-10.0000	114407	-10.0000		-$1.30
		Main Warehouse	61888	DESJ02		27.0000		17.0000		
		ST282			9/14/10	-17.0000	114407	-17.0000		-$2.21
								-1,648.0000		**-$214.24**
	M6061T6B2.000X01.250 / 6061-T6 Bar 2.00 x 1.25	Main Warehouse	57925	DCUSER		40.0000		40.0000		
		MAT			5/18/10	-10.9200	114407	-10.9200		-$83.96
		Main Warehouse	57924	FAUT01		29.0800		29.0800		
		MAT			6/10/10	-10.4000	114407	-10.4000		-$79.96
		Main Warehouse	59612	FAUT01		30.6800		18.6800	B/N	
		MAT			6/14/10	-0.3333	114407	-0.3333	should	-$2.56
		Main Warehouse	61525	DCUSER		30.3467		18.3467	read	
		MAT			9/13/10	-0.7789	114407	-0.7789	114507	-$5.99
		Main Warehouse	61529	DCUSER		29.5678		17.5678		
		MAT			9/13/10	-0.7789	114407	-0.7789		-$5.99
		Main Warehouse	62795	DCUSER		28.7889		16.7889		
		MAT			11/02/10	-0.6667	114407	-0.6667		-$5.13
		Main Warehouse	62914	DCUSER		28.1222		16.1222		
		MAT			11/02/10	-0.6667	114407	-0.6667		-$5.13
								-24.5445		**-$188.72**